ALL-IN-ONE WINDSHIELD DASHCAM SYSTEM

Gatekeeper's new all-in-one windshield mounted dashcam keeps your drivers and passengers safe and accountable, while providing you with piece of mind. With its sleek and compact design, this dashcam system keeps an eye on the action both inside and outside of the vehicle, without compromising your driver's view. The high-denition resolution ensures that still images and video footage pulled from the camera will give you reliable footage, and undeniable clarity for any incidents.

GATEKEEPER

Y62

INSIDE OR OUTSIDE, ENSURE DRIVER SAFETY WITH RELIABLE, CLEAR RECORDINGS.

Gatekeeper's G4 Viewer Plus gives you visibility to what your vehicles encounter daily, both inside and outside of the vehicle, with the option of tracking routes, live streaming video, and wirelessly downloading footage.

The Y62 all-in-one dashcam uses smart technology to tag vehicle names, acceleration and speed information, location, and time/date stamps, so that you have all the information you need on your fleet and drivers, embedded directly into the camera footage

GATEKEEPER

www.gatekeeper-systems.com
sales@gatekeeper-systems.com
Toll Free: 1 888 666 4833

EASY INSTALLATION
WINDSHIELD MOUNTED
OPTIONAL INTERNAL FACING CAMERA

GATEKEEPER

Gatekeeper Systems Inc.
#301-31127 Wheel Avenue
Abbotsford, BC V2T 6H1
Canada

Gatekeeper Systems USA Inc.
221 Valley Road
Wilmington, DE 19804
United States

AUDIO VIDEO

AV RECORDING	Video up to 2 channels Audio up to 2 channels
MAIN STREAM RESOLUTION & FRAME RATE MAX	Inside 1080p @ 30FPS Outside 720p @ 30FPS Mainstream plus 2 way Sub-Stream VGA @ 30FPS
IMAGE SETTING	Brightness, Chroma, Contrast, Saturation and Sharpness
VIDEO CODING	H.265 / H.264
VIDEO COMPRESSION BIT RATE	500Kbps - 8Mbps
AUDIO COMPRESSION STD	ADPCM
BUILT IN SPEAKER	Yes

STORAGE

SD CARD	SDXC64G/128G/256G Optional

SENSOR

6-AXIS SENSOR	Supported

LED

4 indicator lights show status of DVR

POWER	Red light solid - DVR is powered
NORMAL OPERATION	Green light solid
FAULT ALARM	Red light flashes for 1 second, very 10
SLEEP	Green light flahes for 1 second, every 10 seconds

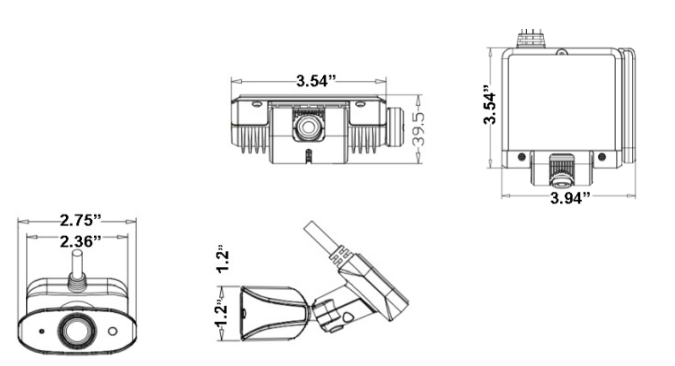

NETWORK

WIFI	Support AP and Client Mode 802.11 b/g/n 2.4GHz
BLUETOOTH	Supported

LOCATION

GPS	Supported

POWER

OUTPUT	5VDC@500mA, 12VDC@500mADC
SUPPLY	9~36V
NORMAL POWER CONSUMPTION	6W
PEAK POWER CONSUMPTION	Less than 9W

PORTS

RS232	2 channels
ALARM	2 channels

ENVIRONMENT

OPERATING TEMPERATURE	-30°C to + 70°C
STORAGE TEMPERATURE	-40°C to + 85°C
HUMIDITY	95%

CAMERA PARAMETERS

SENSOR (INTERNAL CAMERA)	Varies depending on camera
SENSOR (EXTERNAL CAMERA)	1/2.9" 2M pixel CMOS Sensor
ELECTRONIC SHUTTER LENS	1/30 Second-1/100000 Second Inside: Varies depending on camera Outside: 4mm
LENS PORT	M12
DAY/NIGHT IR-CUT	Internal: supported External: not supported
S/N	>48db